MARI

MULTIDISCIPLINARY APPLIED RESEARCH AND INNOVATION
e-ISSN: 2773-4773

Vol. 7 No. 3 (2026) 204-210
https://publisher.uthm.edu.my/periodicals/index.php/mari

# Visual Basic Application Spreadsheet for Statically Determinate Beam

**Muhammad Amar Shaufi Jefri[1], Muhammad Faridz Zulkefly[1], Adriana Najwa Bakhtiar[1], Nor Farah Atiqah Ahmad[1,2]***

[1] *Department of Civil Engineering, Centre for Diploma Studies*
*Universiti Tun Hussein Onn Malaysia, Pagoh Higher Education Hub, 84600 Pagoh, Johor, MALAYSIA*

[2] *Neo Environmental Technology, Centre for Diploma Studies*
*Universiti Tun Hussein Onn Malaysia, Pagoh Higher Education Hub, 84600 Pagoh, Johor, MALAYSIA*

*Corresponding Author: norfarah@uthm.edu.my
DOI: https://doi.org/10.30880/mari.2026.07.03.026

**Article Info**

Received: 01 September 2026
Accepted: 15 October 2026
Available online: 01 December 2026

**Keywords**

Visual Basic application, reaction support, statically determinate beam, SFD, BMD

**Abstract**

This study aims to develop a Visual Basic (VB) application for statically determinate beam with the aim of improving the effectiveness and accuracy of structural analysis for civil engineering courses. The developed VB application by using Microsoft Excel (MS Excel) covers the determination of support reactions and the shear force diagram (SFD) and bending moment diagram (BMD). A total number of 30 participants comprised of First Year (1DAA) and Second Year (2DAA) students from Department of Civil Engineering, Centre for Diploma Studies took part in validation stage. The interface for developed application proves it is user-friendly and allows students to understand the intricacies much more easily as 94% agrees. As for the instructors, this application makes the marking process easier and speedier. The output from this study is hoped to be useful in the development of educational tools within the Civil Engineering course for the accurate and efficient design of structures.

## 1. Introduction

Programming languages, such as Python, Java, C, and C++, direct computers to perform tasks, analyze data, and execute calculations. The concept began in the 19th century when Ada Lovelace created the first algorithm for Charles Babbage's Analytical Engine [1]. These imperative languages are widely used in software development for system and low-level programming. Programming tools have become essential in civil engineering to enhance modeling, analysis, and design for higher efficiency and accuracy [2]. Microsoft created the spreadsheet program called Microsoft Excel. First made available on the Apple Macintosh in 1985, it was subsequently made available for Windows in 1987. Microsoft developers, including Doug Klunder, were important in the early development of Excel. Before this, engineers relied on manual calculations or simple software, but today, with advancements made, there is specialized software available to be utilized for tasks like structural analysis, fluid dynamics, and transport modeling [3]. The development of a combined VB application tool in MS Excel is a major step toward multistory building analysis and design. Traditional steps are laborious, relying either on hand calculations or special-purpose programs involving additional report generation processes.

Students of civil engineering courses typically find beam design calculations challenging, as the calculation is lengthy and interconnected. Hence, there are several software developed to ease the structural design processes as shown in Table 1. However, commonly the error in the calculation of support reactions can propagate to the

This is an open access article under the CC BY-NC-SA 4.0 license.

entire design, leading to erroneous results. Not only does this demotivate student from learning, but it also complicates and elongates the marking process for teachers.

**Table 1** *Example software of structural engineering*

| Software | Developer | Primary use | Notable features | Benefits | Pros | Cons |
|---|---|---|---|---|---|---|
| REVIT [4] | Autodesk | BIM (Building Information Modelling) | 3D modelling, architectural design, MEP, structural detailing | Help in organized design documentation and 3D modeling | Automatic Updates | Heavy on Hardware |
| ESTEEM [5] | ESTEEM Inc | Structural analysis and design | Comprehensive structural analysis for building and bridges | Reduces calculation errors through design step automation | User-Friendly Interface | Limited for Steel Design only |
| TEKLA [6] | Trimble | BIM and structural detailing | Detailed 3D modelling, steel and concrete detailing | Reduces construction errors by using 3D modeling | Detailed 3D Model | Expensive Software |
| ETABS (Extended 3D Analysis of Building Systems) [7] | Computers and Structures, Inc. (CSI) | Structural analysis and design for buildings | Advanced analysis, multistory building design, seismic and wind analysis | Minimize mistakes in force distributions and load estimates | Powerful Analysis Tools | High System Requirements |

The objective of this study was to develop a VB Application in MS Excel for determining the support reactions in statically determined beams, and to verify its efficiency by testing its accuracy and ease of use through spreadsheet calculations and data analysis. The method involved developing the application and conducting a series of tests to compare its results with manual calculations. The conclusion drawn from the results demonstrated that the VB application accurately determined support reactions and significantly improved efficiency, providing an easy-to-use tool for structural analysis [8].

## 2. Methodology

The VB application for beam design in MS Excel automates calculations, improves efficiency, and generates results, diagrams, and reports [9]. It is designed through a review of existing tools, user requirements, and a structured workflow, with VB code for input, calculations, and output [10]. Testing and user feedback ensure accuracy and improvements. Fig. 1 shows the flowchart which gives insight of how this application runs.

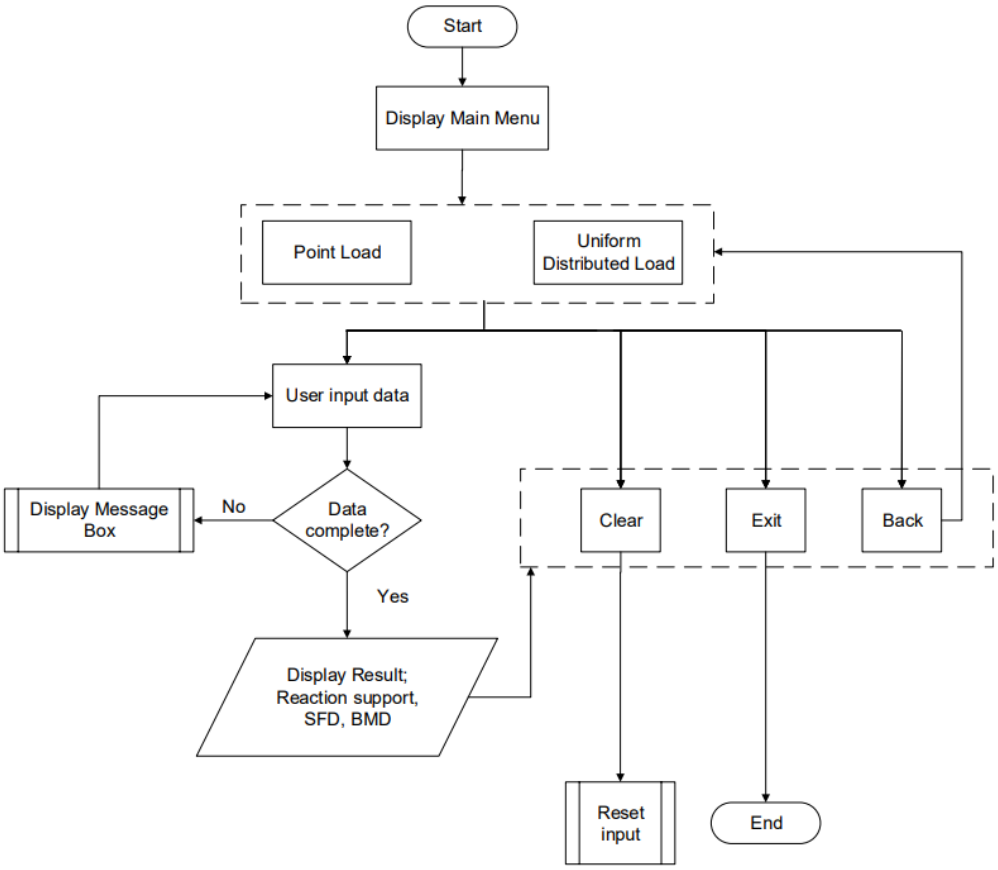


**Fig. 1** *Application operation flow chart*

In this study, two primary types of loads are used; point load (PL) and uniform distributed load (UDL) under statically determinate beam and based on these two types of loads, a total of six cases were used in this study. In structural design, PL units in kN are treated as concentrated forces to simplify complex load systems such as column loads on beams or wheel loads on bridges, causing sudden variations in shear force and linearly varying bending moments that lead to stress concentrations and deflections requiring careful design measures. On the other hand, UDL which represent evenly spread loads like beam self-weight or floor live loads, are measured in units like kN/m and produce linear shear force variations and parabolic bending moments, simplifying analysis and helping ensure the structure meets strength and serviceability requirements [9]. Fig. 2(a) shows one of the examples for PL cases and can be expressed as equation (1). Whereas Fig. 2(b) shows the example for UDL case with additional PL and can be expressed as equation (2).

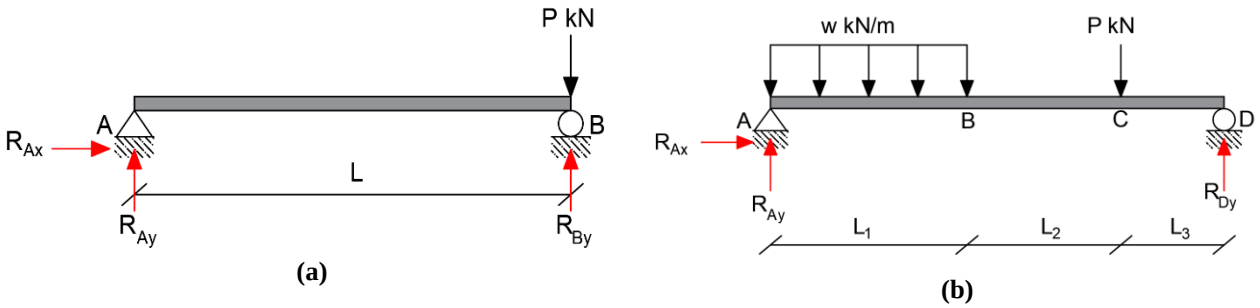


**Fig. 2** *Example of (a) PL Case; (b) UDL Case*

$$\circlearrowleft + \sum M_A = 0, \ -(P\,kN \times L) + R_{By} \times L = 0 \tag{1}$$

$$R_{By} = \frac{(P\,kN \times L)}{L}$$

$$RBy = P\,kN$$

$$\uparrow + \sum F_y = 0, \; -P\,kN + R_{By} + R_{Ay} = 0$$

$$R_{Ay} = P\,kN - R_{By}$$

$$R_{Ay} = 0$$

$$\circlearrowleft + \sum M_A = 0, \; -\left(w\,\frac{kN}{m} \times L_1 \times \frac{L_1}{2}\right) - \left(P\,kN \times (L_1 + L_2)\right) + \left(R_{Dy} \times (L_1 + L_2 + L_3)\right) = 0$$

$$R_{Dy} = \frac{\left(w\,\frac{kN}{m} \times L_1 \times \frac{L_1}{2}\right) + \left(P\,kN \times (L_1 + L_2)\right)}{(L_1 + L_2 + L_3)} \tag{2}$$

$$\uparrow + \sum F_y = 0, \; R_{Ay} - \left(w\,\frac{kN}{m} \times L_1\right) - PkN + R_{Dy} = 0$$

$$R_{Ay} = \left(w\,\frac{kN}{m} \times L_1\right) + PkN - R_{Dy}$$

The developed application was tested for verification with ten students from first year (1DAA) and second year (2DAA) Diploma in Civil Engineering course respectively. Students been given two sets of problems consisting of PL and UDL. They were required to solve the problem manually before using the developed application. The time allocated for them to solve the problems manually and by using the application was taken as data collection. A feedback form has also been given for user opinions, recommendations and further evaluations.

## 3. Results and Discussion

The aim of this study is to develop a user-friendly application that helps students and teachers to solve the reaction support for statically determinate beam for both PL and UDL cases by taking advantage of MS Excel user familiarity and flexibility in customizable user forms.

### 3.1 The Developed Application

Fig. 3(a) shows the main interface for the application. From the main interface, users must choose either PL or UDL case problems. The interface for each case is shown as in Fig. 3(c-d). Users must enter the required values as input; load, length of load, total length, etc before clicking the Calculate button. If there is any data that is missing from user, a message box (Fig. 3(b)) will appear, and users are required to enter the value before this application can proceed .

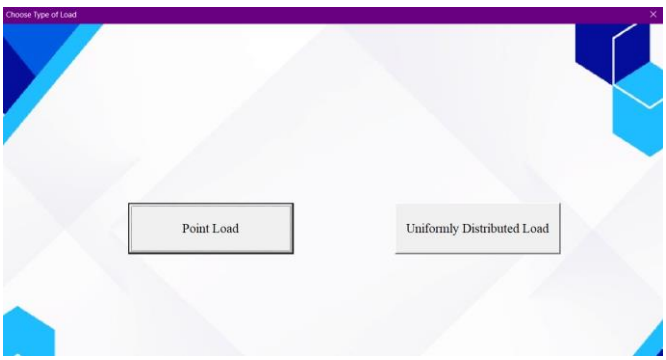


(a)

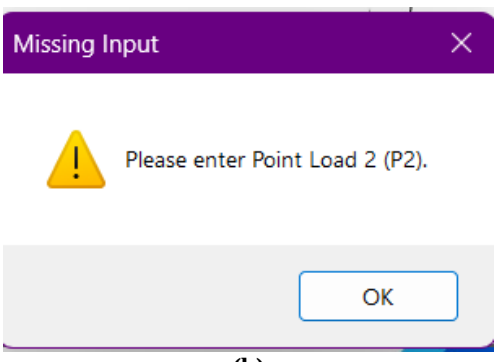


(b)

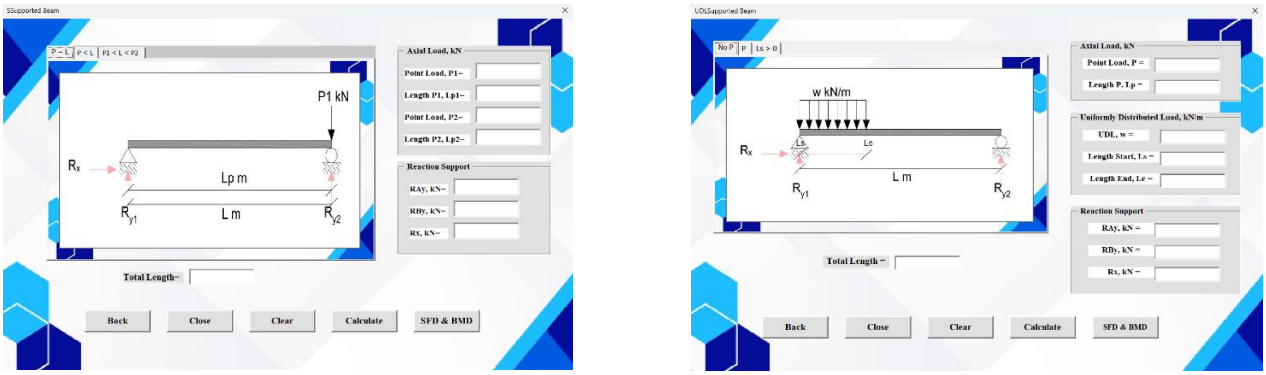


(c) (d)

**Fig. 3** *VB application interface (a) Main interface; (b) Missing input message box; (c)PL interface; (d) UDL interface*

## 3.2 Performance Evaluation

The amount of time allocated for each student to solve calculation manually and by using application are tabulated as in Table 2. On average, 1DAA students took 12 minutes and 21 minutes to solve PL and UDL problems manually, respectively. Whereas they took approximately 53 seconds and 51 seconds to obtain reaction support from the developed applications. As for 2DAA students, approximately took 8min to solve PL problem and 11 minutes for UDL problem manually and took 59 seconds and 56 seconds by using application for PL and UDL respectively.

**Table 2** *Duration of solving a Point Load and UDL Cases*

| Student | Year | Duration, s | | | |
|---|---|---|---|---|---|
| | | PL | | UDL | |
| | | Manual | VB App | Manual | VB App |
| 1 | 1 | 310 | 30 | 1409 | 50 |
| 2 | | 535 | 35 | 1430 | 53 |
| 3 | | 690 | 35 | 1430 | 42 |
| 4 | | 1200 | 69 | 2440 | 44 |
| 5 | | 610 | 33 | 770 | 31 |
| 6 | | 945 | 80 | 1025 | 61 |
| 7 | | 385 | 104 | 1740 | 71 |
| 8 | | 861 | 47 | 1105 | 46 |
| 9 | | 754 | 46 | 1221 | 50 |
| 10 | | 892 | 47 | 155 | 62 |
| 11 | 2 | 390 | 61 | 760 | 55 |
| 12 | | 277 | 35 | 615 | 57 |
| 13 | | 522 | 81 | 765 | 57 |
| 14 | | 407 | 55 | 477 | 57 |
| 15 | | 340 | 50 | 780 | 55 |
| 16 | | 683 | 41 | 994 | 46 |
| 17 | | 812 | 55 | 1025 | 43 |
| 18 | | 641 | 40 | 946 | 45 |
| 19 | | 426 | 90 | 63 | 77 |
| 20 | | 458 | 78 | 101 | 65 |

This shows time saving up to 93% of students allocated time for calculating reaction support and it can minimize the error for further calculation as shown in Fig. 4.

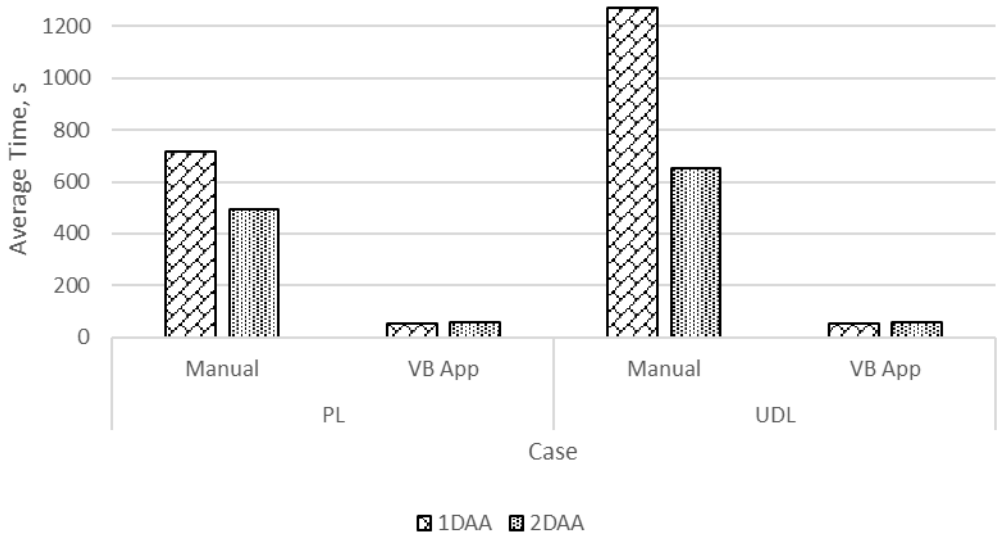


**Fig.4** *The chart for comparison of average calculation time*

## 4. Conclusion

This project effectively created and assessed a VB application-based automated calculation tool for resolving structural loading issues. The study showed distinct benefits in terms of time efficiency (up to 93%) through comparisons between automated and manual computations, especially for more complicated loading conditions like uniformly distributed loads (UDL). The findings also demonstrated that the VB Application is a useful tool for expediting structural analysis activities since it retains a high degree of accuracy and consistency. In the end, automating these computations not only increases output but also lowers the possibility of human error, providing a great deal of potential for application in both professional and educational settings.

## Acknowledgement

The authors would like to thank the Centre for Diploma Studies, Universiti Tun Hussein Onn Malaysia for its support.

## Conflict of Interest

Authors declare that there is no conflict of interest regarding the publication of the paper.

## Author Contribution

*The authors confirm contribution to the paper as follows:* ***study conception and design:*** *Nor Farah Atiqah binti Ahmad, Muhammad Amar Shaufi Jefri;* ***data collection:*** *Muhammad Faridz Zulkefly, Adriana Najwa Bakhtiar;* ***analysis and interpretation of results:*** *Muhammad Amar Shaufi Jefri, Muhammad Faridz Zulkefly, Adriana Najwa Bakhtiar;* ***draft manuscript preparation:*** *Muhammad Amar Shaufi Jefri, Muhammad Faridz Zulkefly, Adriana Najwa Bakhtiar, Nor Farah Atiqah Ahmad. All authors reviewed the results and approved the final version of the manuscript.*

## References

[1] E. Haugtvedt and D. L. Abata, "*Lovelace's program: A challenging but achievable assignment for undergraduate students in engineering and computer science*," in Proc. 2021 ASEE Virtual Annu. Conf. Content Access, Jul. 2021.

[2] J. A. Smith and R. B. Doe, "*Use of MS Excel as a design tool in a 90-story reinforced concrete building*," in Proc. Int. Conf. High-Rise Buildings, 2020, pp. 123–130.

[3] R. K. Hui and M. J. Kromberg, "*APL since 1978*," Proc. ACM Program. Lang., vol. 4, no. HOPL, pp. 1–108, 2020.

[4] F. Roberti and D. Ferreira, *Increasing Autodesk Revit Productivity for BIM Projects: A Practical Guide to Using Revit Workflows to Improve Productivity and Efficiency in BIM Projects*. Birmingham, U.K.: Packt Publishing Ltd., 2021.

[5] Q. Liu, M. Jiang, S. Li, and Y. Yang, "*Social support, resilience, and self-esteem protect against common mental health problems in early adolescence: A nonrecursive analysis from a two-year longitudinal study*," Medicine, vol. 100, no. 4, Art. no. e24334, 2021.

[6] M. Österblad, "*Implementation of environmental product declarations into the design process: A case study of steel and concrete structures using Tekla Structures*," Thesis, 2024.
[7] A. K. Dhomne, "*Analysis and design of multistorey residential building using ETABS*," Doctoral dissertation, Faculty of Science & Technology, RTM Nagpur Univ., Nagpur, India, 2021.
[8] Civil Construction Tools. "*Simply supported beam analysis with Excel VBA*" [Online]. Available: https://www.civilconstructiontools.com/download/simply-supported-beam-analysis-with-excel-vba/. [Accessed: Apr. 27, 2025].
[9] M. J. Kesot, R. A. Nazri, P. A. S. Amri, and N. S. M. M. Mansor, "*Techsource programme: Simply supported reinforced concrete beam design by Microsoft Excel*," Multidisciplinary Applied Research and Innovation, vol. 2, no. 2, pp. 37–47, 2021.
[10] M. Hassan, D. L. Paul, A. Rahman, A. I. Hossain, and S. Hore, "*Structural analysis and design of a seismically resilient multi-story primary school building in rural Bangladesh*," J. Architectural Environment & Structural Engineering Research, vol. 7, no. 4, pp. 1–13, 2024.