MARI

MULTIDISCIPLINARY APPLIED RESEARCH AND INNOVATION
e-ISSN: 2773-4773

Vol. 7 No. 3 (2026) 231-236
https://publisher.uthm.edu.my/periodicals/index.php/mari

River Cleaning Device

Shahrul Razif Ahmad Salleh[1], Mohammad Amirullah Mohd Daud[1], Wan Muhammad Alif Haqimi Wan Mukhtar[1], Siti Mariam Basharie[1,2]*, Noor Azizah Sidek[1], Ghazali Kadis[1], Azli Nawawi[2]

[1] *Department of Mechanical Engineering, Centre for Diploma Studies*
Universiti Tun Hussein Onn Malaysia, Pagoh Higher Education Hub, 84600 Pagoh, Johor, MALAYSIA
[2] *Department of Mechanical Engineering Technology, Faculty of Engineering Technology*
Universiti Tun Hussein Onn Malaysia, Pagoh Higher Education Hub, 84600 Pagoh, Johor, MALAYSIA

*Corresponding Author: mariam@uthm.edu.my
DOI: https://doi.org/10.30880/mari.2026.07.03.029

Article Info

Received: 01 September 2026
Accepted: 15 October 2026
Available online: 01 December 2026

Keywords

Aquatic debris removal, Internet of Things (IoT), Unmanned Surface Vehicle (USV), smart waste management, wireless remote control, river pollution

Abstract

River pollution, particularly from floating plastic waste, poses significant threats to aquatic life, public health, and tourism in Malaysia. To address these issues, this project aims to design and develop a remote-controlled river cleaning device capable of safely and efficiently collecting surface trash. The prototype uses recyclable materials such as PVC for buoyancy, is powered by a rechargeable battery, and is operated via a microcontroller-based control system. It is designed to collect up to 2 kg of waste, operate for up to two hours, and navigate at a speed of 0.3 m/s. Experimental results demonstrated that the device significantly outperforms manual collection, retrieving 2.0 kg of waste in just 5.5 minutes compared to 10 minutes manually. This indicates a clear efficiency advantage and high practicality for real-world aquatic cleanup applications. By demonstrating a 45% reduction in collection time (2.0 kg in just 5.5 minutes), this device provides a proven, low-cost, and eco-friendly alternative to manual river cleaning. Ultimately, it significantly reduces human risk while contributing to environmental sustainability and the preservation of natural water resources.

1. Introduction

River pollution is one of the most pressing environmental issues in Malaysia today, affecting not only aquatic life but also human health and local communities [1]. A significant portion of river pollution comes from floating waste such as plastic bottles, food wrappers, and other non-biodegradable debris. These pollutants degrade the beauty of natural water bodies, disrupt ecosystems, and pose health risks when contaminants enter the human food chain. Moreover, polluted rivers can negatively impact tourism, especially in areas where rivers are central to natural eco-tourism. Specific issues such as visible plastic debris, unpleasant odors, and poor water quality directly disrupt high-value tourist activities, including river cruising, kayaking, and recreational fishing, ultimately causing significant economic losses to local communities. attractions.

Traditionally, river cleaning efforts involve manual labor using boats and nets. While this method may be effective in small-scale cleanups, it is often physically demanding, time-consuming, and hazardous. Volunteers and workers face risks such as slipping on wet rocks, exposure to wild animals, and unpredictable river conditions [2]. In addition, many parts of rivers are narrow or difficult to access, making it nearly impossible to clean those areas

This is an open access article under the CC BY-NC-SA 4.0 license.

without specialized tools [2]. These limitations highlight the urgent need for a safer, more efficient, and cost-efective solutions.

To address these challenges, this project proposes the design and development of a river cleaning device that is lightweight, remote-controlled, and capable of operating in difficult-to-reach areas. The device is built using recyclable materials such as PVC buoyancy and powered by a battery-operated motor system. It integrates key mechanical and electronic components such as motors, propellers, and microcontrollers to ensure smooth operation and waste collection. The device is intended to reduce human involvement in hazardous cleanup tasks while improving the efficiency of waste collection in rivers [2].

Several existing technologies have been developed to address riverine pollution, yet they often present operational and economic limitations. For instance, large-scale stationary systems like river interceptors offer high trash collection capacities but require substantial capital investments, sometimes exceeding tens of thousands of dollars, and rely heavily on natural water currents to guide debris into their traps. Similarly, mechanisms like the Spinning Cogs River Cleaner System are effective in fast-moving waters but experience a significant drop in performance under low-flow conditions (e.g., water currents below 0.5 m/s). Furthermore, traditional motorized skimmer boats provide mobility but incur high operational costs for fuel and manual labor. These limitations highlight the critical need for a low-cost, highly mobile, and energy-efficient device that can actively navigate to collect floating debris regardless of natural water currents. By combining traditional cleaning concepts with modern engineering and affordable materials, this river cleaning device offers an innovative, eco-friendly, and scalable approach to mitigating water pollution. The integration of sustainable design and automation makes it a practical tool for environmental conservation and public health protection.

2. Methodology

Research methodology is a systematic method of solving problems by establishing the best and most suitable method of carrying out a project. It ensures that the objectives and purpose of research are achieved. In this project, the methodology is used to guide the design and construction of a river cleaning device to ensure the final year project requirements are met [3].

This section outlines the whole process of manufacturing the product from the beginning to its final process. It also contains a flow chart of all the processes involved in the development process. The flow chart is important as it simplifies how the readers can understand how the product is made and how it works.

From internet research, some of the problems faced by river cleaning volunteers were identified. Some of them are back and shoulder strain, being attacked by animals, slipping on wet rocks, and other dangers [4]. This project will remedy those problems by designing a gadget that reduces those risks to make river cleaning less risky and easier.

2.1 Hull Design

This section outlines the rationale behind the selected hull design. To ensure optimal performance, the device requires a hull with high buoyancy, excellent distribution, and a shallow draft to navigate rivers of varying depths. A pontoon hull was specifically chosen over conventional monohull or V-hull designs due to its superior hydrodynamic advantages. The dual-pontoon structure provides a wider beam (base), which significantly enhances transverse stability. This prevents the device from tilting or capsizing when carrying heavy or unevenly distributed loads of collected waste. Furthermore, the pontoon design distributes buoyancy evenly across two separate hulls, maintaining a shallow draft for shallow waters while creating a practical central channel between the pontoons, an ideal space for integrating the waste collection mechanism without obstructing water flow control.

2.2 System and Electronic Components

To allow the device to move freely on the river surface, a few electronic components are used, such as microcontrollers, motors and battery.

2.2.1 Microcontroller

Microcontrollers allow the device to be controlled easily through a wi-fi connection. With the right coding programme, the device would successfully obey the task given by the control panel. The ESP32 Development Board was selected as the central microcontroller for this project due to its specific hardware features that ideally suit Internet of Things (IoT) and remote-controlled applications. Unlike standard microcontrollers (e.g., Arduino Uno), the ESP32 features built-in Wi-Fi and Bluetooth capabilities, which are essential for establishing a seamless and direct wireless connection with the Android control application without requiring additional modules. Furthermore, its dual-core processor (operating up to 240 MHz) ensures that the system can handle wireless communication and real-time motor control signals simultaneously without latency. Finally, its ample General-

Purpose Input/Output (GPIO) pins, compact footprint, and low power consumption make it highly optimal for a battery-operated, mobile river cleaning device.

2.2.2 Motor

In the system, the motor works as a component that moves the device on the river surface by changing the electric energy into mechanical energy. Since the system is powered by batteries, Direct Current (DC) motor was chosen to provide propulsion for the device. Specifically, a standard 12V brushed DC motor with a rotational speed of approximately 3000 RPM was utilized. These specifications were selected as they provide optimal torque and sufficient thrust to effectively navigate the device at its targeted speed of 0.3 m/s, even when carrying a full load of 2.0 kg of collected waste. To ensure durability and safe operation in an aquatic environment, the motor is enclosed within a waterproof housing to prevent water ingress and short internal circuits.

2.2.3 Battery

Power supply is essential to drive the electronic components and the propulsion system. For this device, a 12V, 5000 mAh Lithium-ion (Li-ion) battery pack was selected. This specific battery type was chosen due to its high energy density and lightweight characteristics, which are crucial for maintaining the device's buoyancy without adding excessive dead weight. Furthermore, with a capacity of 5000 mAh, it provides a stable and sufficient power source to sustain the ESP32 microcontroller, motor driver, and the DC motors for up to two hours of continuous operation.

2.2.4 Motor Driver

A motor driver is an electronic circuit or device that controls the speed, direction, and torque of an electric motor. It ensures the motor operates safely and efficiently by managing current, voltage, and direction in the system.

2.3 Final Design

The River Cleaning Device design was developed to ensure optimal functionality, stability and accessibility for river waste collection. Inspired by the concept of a catamaran fishing boat, the final design as shown in Fig. 1 uses buoyant materials such as sealed PVC pipes to keep the device afloat. During the development process, several design iterations were tested. Initially, a single-hull (monohull) prototype was constructed using repurposed plastic containers. However, this early iteration demonstrated poor transverse stability; the device tended to tilt or capsize when the collected waste shifted to one side. To resolve this issue, the design was modified into a dual-pontoon structure using standardized sealed PVC pipes. This modification worked exceptionally well, the PVC pipes provided uniform, predictable buoyancy, while the wider stance of the dual-hull configuration offered the necessary stability to prevent capsizing even under a full 2.0 kg load. These insights from the initial failure directly influenced the robustness of the final hull design. Various design iterations were explored, including a raft-style layout with a front-mounted collector, and a dual-purpose frame that combines flotation and waste storage. Key features such as a 3D-printed compartment for electronics, strategically placed propellers for propulsion and a streamlined waste collection system were incorporated to maximize efficiency, durability and environmental friendliness. Each design iteration prioritized lightweight construction, ease of use, and adaptability to narrow or debris-filled waterways. Beyond the PVC pontoon hull, the main structural frame was constructed using rigid acrylic sheets to ensure durability without adding excessive weight. For the waste collection mechanism, a durable, fine-mesh nylon net was utilized, which effectively traps debris while allowing continuous water flow with minimal drag resistance. A significant challenge faced during the construction phase was ensuring the absolute waterproofing of the central electronic control unit. Initial tests showed vulnerability to water splashes. To overcome this, a customized enclosure was implemented and reinforced with silicone sealants and rubber gaskets, effectively protecting the ESP32 microcontroller, motor driver, and battery from moisture ingress.

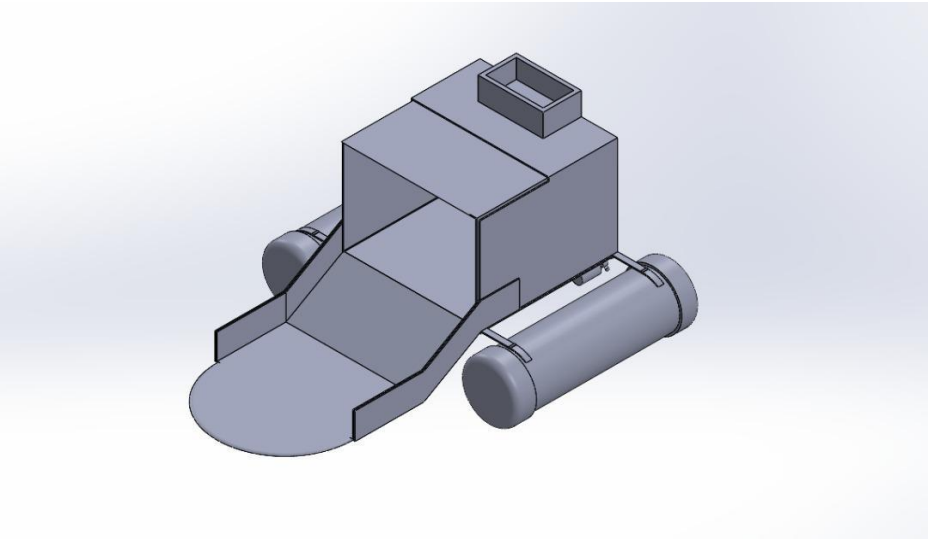

Fig. 1 *The River Cleaning Device design*

3. Result and Discussion

The result is intended to present the findings of an experiment or study objectively, without interpretation or bias. It includes raw data or outcomes gathered during the research process, such as measurements, tables, or graphs that describe what was observed or recorded [5]. The data must be clear and structured in a way that supports transparency and reproducibility of the study.

On the other hand, the discussion section is used to explain and interpret those results. It connects the findings to the original research objectives or problem statements, identifies patterns or trends, and explains their meaning, implications, or usefulness [6]. This section often compares the current results with previous studies or theoretical expectations, providing insight into whether the outcomes align with or differ from established knowledge.

3.1 Result

To test the efficiency of the device, a collecting rate test was conducted between traditional manual methods of collecting trash and the use of the River Cleaning Device to compare which one can collect trash with a shorter time. The test was first conducted by seeing each method collecting 0.2 kg of trash and then recording the time taken by each method. For the next set of data, increase the mass of trash needed to be collected by adding 0.2 kg of data to the previous one and record the time taken by both methods. Repeat the steps until the mass of the trash collected reaches 2.0 kg as shown in Fig. 2.

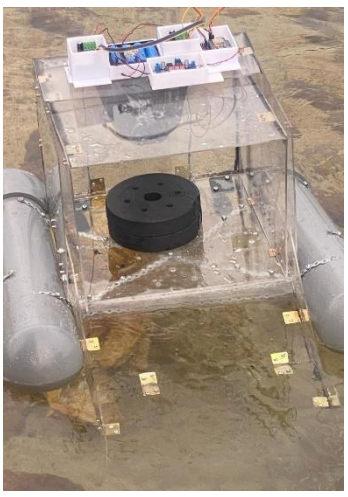

Fig. 2 *Devise tested with a 2 kg load*

Multidisciplinary Applied Research and Innovation Vol. 7 No. 3 (2026) p. 231-236

Fig. 3 shows the result obtained by the test conducted. From the graph, it showed that both methods require more time as the mass increases, but the device method consistently takes significantly less time. The difference becomes more prominent at higher masses for instance, collecting 2.0 kg of trash takes only 5.5 minutes with the device, compared to 10 minutes manually. This indicates a clear efficiency advantage when using the device.

From the trend observed, the device method has a higher rate of trash collection, meaning it can collect more trash in less time. This is especially useful in large scale cleanups, such as at beaches, parks, or public events, where time and manpower are critical. By adopting the device method, labor costs and physical strain can be reduced, while improving productivity. Overall, the graph strongly supports the idea that mechanized methods of trash collection are not only faster but also more practical for real-world applications.

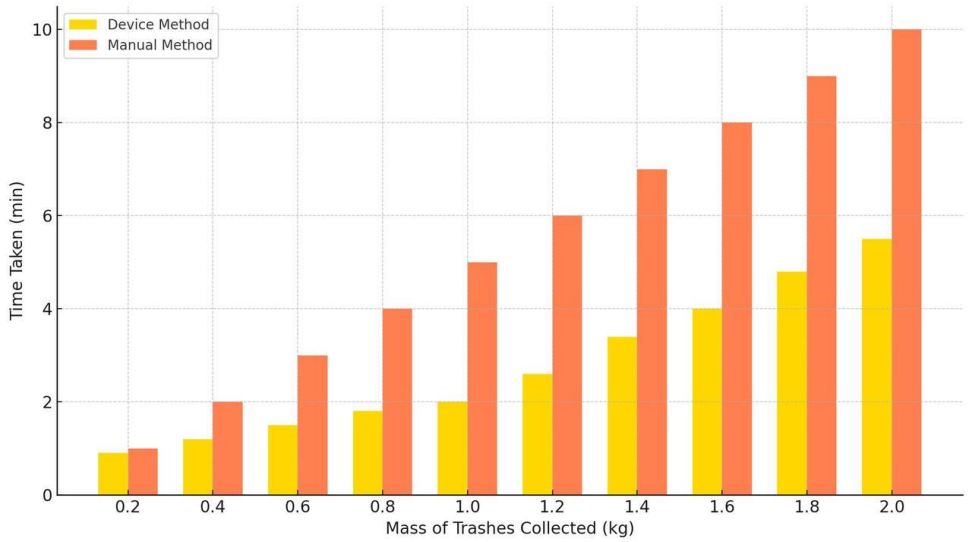

Fig. 3 *Comparison of trash collection time*

3.2 Discussion

The design of this River Cleaning Device was inspired from the design of the Bulldozer. The device applies the function of the front shovel to collect trashes easily. However, the function works differently on the river surface. The main issue with the current device design lies in the submerged front plate, which unintentionally creates a hydrodynamic force that pushes floating trash away from the collection zone [7]. When the front part of the device moves through water, it displaces water forward and to the sides. This water movement creates a repelling effect, especially on lightweight and buoyant trash, causing it to move away from the intake instead of being guided into it [8].

This issue significantly compromises the device's efficiency, causing it to deflect floating trash rather than capturing it. If left unresolved, this flaw undermines the system's overall effectiveness in vital real-world applications. When functioning optimally, the device is intended for deployment in diverse practical scenarios, such as community clean-up events, where it can safely assist volunteers by accelerating surface debris removal while minimizing direct human contact with contaminated water. Additionally, its compact nature makes it highly applicable in areas with severe localized pollution or hard-to-reach zones including narrow urban canals, marina docks, and beneath low-clearance bridges, where traditional skimmer boats cannot operate. To unlock this practical potential and ensure reliable performance, removing or modifying the submerged front component is a logical step. This modification reduces water flow obstruction, increasing the capture rate of floating trash. Furthermore, integrating angled or surface-level guiding panels could effectively funnel trash directly into the collection area without generating unwanted hydrodynamic resistance [9].

4. Conclusion

To sum up, the River Cleaning Device was effectively created and constructed to assist in the safer and more effective removal of floating trash from rivers. The device navigates efficiently across the water's surface, driven by an integrated motor and propeller system. Strength and durability are guaranteed by its structure, which is composed of perspex board and held up by rivets and L-shaped metal sheets. The device can float steadily because of the excellent buoyancy provided by the PVC pipes that are fastened with steel bands and screws. To ensure long-term and safe operation, electronic components are also shielded from water by a 3D-printed casing.

This project demonstrates that an efficient river cleaning solution can be created using basic materials and accessible technology. By intercepting surface waste before it degrades or reaches the ocean, this device actively contributes to broader environmental conservation efforts, such as mitigating aquatic plastic pollution and restoring local marine ecosystems.

For future work, several improvements can be implemented to enhance the device's functionality and scalability. To integrate new technologies, future iterations could incorporate GPS modules and ultrasonic sensors to upgrade the system from manual remote control to fully autonomous navigation. Additionally, mounting solar panels on the device would provide a renewable energy source, significantly extending its operational hours. In terms of scaling up production, transitioning from PVC materials to commercial-grade fiberglass would allow for the development of larger, more robust variants capable of handling heavier waste loads in stronger river currents. Finally, incorporating an AI-based camera system could enable the device to automatically detect and classify floating debris, further optimizing the efficiency of river cleaning operations.

Acknowledgement

The authors would like to express their highest appreciation to the Centre for Diploma Studies, Universiti Tun Hussein Onn Malaysia, for providing the necessary resources and support throughout this research. Special appreciation is extended to colleagues and peers who contributed valuable insights and constructive feedback, which greatly enhanced the quality of this paper.

Conflict of Interest

Authors declare that there is no conflict of interests regarding the publication of the paper.

Author Contribution

The authors confirm contribution to the paper as follows: ***study conception and design:*** *Shahrul Razif, Mohammad Amirullah, Wan Muhammad Alif Haqimi;* ***data collection:*** *Shahrul Razif, Mohammad Amirullah, Wan Muhammad Alif Haqimi;* ***analysis and interpretation of results:*** *Shahrul Razif, Mohammad Amirullah, Wan Muhammad Alif Haqimi;* ***draft manuscript preparation:*** *Shahrul Razif, Mohammad Amirullah, Wan Muhammad Alif Haqimi, Noor Azizah, Azli Nawawi, Ghazali Kadis;. All authors reviewed the results and approved the final version of the manuscript.*

References

[1] Department of Environment Malaysia, Environmental Quality Report 2019. Putrajaya, Malaysia: Ministry of Environment and Water, 2020. [Online]. Available: https://www.doe.gov.my/

[2] M. M. Rahman and K. A. Ismail, "*Development of a remote-controlled aquatic cleaning device for urban river maintenance*," IOP Conf. Ser.: Earth Environ. Sci., vol. 716, p. 012029, 2021, doi: 10.1088/1755-1315/716/1/012029.

[3] J. R. Mihelcic, J. B. Zimmerman, and M. R. Edwards, "*Sustainable engineering design for environmental systems*," Environ. Eng. Sci., vol. 20, no. 3, pp. 240–250, 2003.

[4] T. T. S. Lam, M. M. Rahman, and M. A. Razak, "*Development of a cost-effective river cleaning device for inaccessible areas*," J. Adv. Mech. Eng., vol. 9, no. 2, pp. 85–92, 2022.

[5] P. D. Leedy and J. E. Ormrod, Practical Research: Planning and Design, 12th ed. Boston, MA, USA: Pearson, 2020.

[6] A. Kumar, Research Methodology: A Step-by-Step Guide for Beginners, 4th ed. London, U.K.: SAGE Publications, 2019.

[7] R. J. Adrian and J. Westerweel, Particle Image Velocimetry. Cambridge, U.K.: Cambridge University Press, 2011.

[8] J. Huang, X. Liu, and M. Lee, "*Simulation-based optimization of floating waste intake systems*," Ocean Eng., vol. 187, pp. 106–112, 2019.

[9] M. H. Lee, "*Low-drag hull design for small-scale river robots: Impact on floating debris collection*," IEEE Trans. Instrum. Meas., vol. 70, pp. 1–7, Jan. 2021.