MARI

MULTIDISCIPLINARY APPLIED RESEARCH AND INNOVATION
e-ISSN: 2773-4773

Vol. 7 No. 3 (2026) p. 263-269
https://publisher.uthm.edu.my/periodicals/index.php/mari

Semi-Automated Smart Hydroponics: Sustainable Farming for Modern Cities

Khairulnizam Ngadimon[1,2]*, Amylia Syafiqa Jasmi[1], Nurul Fateen Nadiana Sapinei[1], Nurshamila Muhammad[1]

[1] *Department of Mechanical Engineering, Centre for Diploma Studies*
Universiti Tun Hussein Onn Malaysia, Pagoh Higher Education Hub, 84600 Pagoh, Johor, MALAYSIA
[2] *Vehicle Control and Robotics Engineering (VeCaRE), Centre for Diploma Studies,*
Universiti Tun Hussein Onn Malaysia, Pagoh Higher Education Hub, 84600, Pagoh, Johor, MALAYSIA

*Corresponding Author: knizam@uthm.edu.my
DOI: https://doi.org/10.30880/mari.2026.07.03.033

Article Info

Received: 01 September 2026
Accepted: 15 October 2026
Available online: 01 December 2026

Keywords

Hydroponics, semi-automated system, smart farming, urban agriculture, greenhouse monitoring, Arduino, spinach growth

Abstract

Hydroponics is a sustainable agricultural method that replaces soil with nutrient-rich solutions which allow for efficient crop growth. It uses less space and water, making it ideal for modern urban farming. However, conventional hydroponic systems still face several challenges as they require constant manual monitoring of pH level, temperature, and water circulation, which can be time consuming and may negatively affect plant growth if not properly maintained. In this study, spinach grown using the traditional system reached only 4.7 cm in height with 7 leaves after 21 days, compared with 7.4 cm and 11 leaves under the semi-automated system. These monitoring requirements may present significant operational challenges, particularly for inexperienced users. Unstable pH levels and inconsistent environmental conditions can also affect the crop quality and yield. This study focused on developing a semi-automated hydroponic system which can reduce these challenges. The system includes scheduled water circulation, greenhouse integration, and environmental monitoring using sensors to support the growth of spinach in limited urban spaces. This structure was built using PVC, galvanized steel, polycarbonate sheets, and wood for durability. Sensors for pH and temperature were integrated with an Arduino microcontroller to automate environmental control inside the greenhouse. LED grow lights were added to support plant growth in indoor conditions. Spinach was selected as the test plant due to its fast growth rate. The system was tested in a controlled greenhouse environment, and the results show that the semi-automated features reduce the manual workload and at the same time promote healthier and consistent plant growth. This also can maintain stable environmental conditions. This study concludes that the system is effective for small-scale urban farming, with opportunities for future improvements such as ESP32-based mobile monitoring and control for real-time pH and temperature observation, automated nutrient dosing, and modular expansion to increase planting capacity.

This is an open access article under the CC BY-NC-SA 4.0 license.

1. Introduction

Hydroponics, a subset of soilless agriculture, is a method of growing plants in nutrient-rich water solutions. This system eliminates the need for soil, with or without the mechanical support of an inert medium such as sand, gravel, or perlite, allowing for greater control over plant nutrition and environmental conditions [1]. Hydroponic production systems are usually used by small farmers, hobbyists and commercial enterprises as it does not require large areas like traditional farming. Some hydroponic systems require the plants to float on the water surface or keep their roots continuously submerged in the nutrient solution, which may create poorly aerated conditions that encourage fungal growth and increase the risk of root-related diseases. Circulating systems such as the Nutrient Film Technique have been introduced to improve the continuous delivery of nutrients and oxygen to the plant roots. Temperature variation is another significant concern because excessively high or low temperatures may cause stunted growth and affect leaf development.

Previous hydroponic systems have incorporated temperature sensors, microcontrollers, and greenhouse-based environmental controls to monitor and maintain suitable growing conditions [2]. This innovative approach has gained popularity due to its efficiency, adaptability, and potential to address global food security challenges. It is a great option for people with little or no gardening space, or who want to grow herbs and vegetables [3]. A wide variety of vegetables and florist crops can be grown satisfactorily with hydroponic systems. As for the light, the homeowner doesn't need to put this hydroponic system to a location exposed to sunlight because this hydroponic system already comes with grow-light. For indoor farming, grow light is a crucial factor for plant growth [4]. Its function can be on par with sunlight. The grow light can speed up growth compared to the sunlight.

1.1 Hydroponic System and Trends

The word hydroponic comes from two Greek words meaning "hydro" (water) and "ponos" (labour) [5]. Hydroponics is not a new concept. Its modern scientific development began in the nineteenth century through studies on plant nutrition by researchers such as Sachs and Knop. The technique was later developed and popularized for commercial crop production by W. F. Gericke during the 1920s and 1930s [6].

Hydroponics is one of the modern sustainable agricultures, which is growing plants methods without using soil. This agriculture technique has revolutionized the concept of farming, offering a soil-less alternative that relies on nutrient-rich solutions. Plants in hydroponic are typically supported by inert mediums like rock wool, clay pelts, or peat moss [7]. It is to support root and moisture retention.

Over the years, agricultural practices have become further and further refined to increase yields despite changing environmental conditions. These days hydroponic provides a way of producing plants in an efficient way for this urban hydroponic industry. Vertical farming is one of the inventions in hydroponic fields. Once appeared differently compared to the structure to proceed with the components associated with exceptional development [8]. It is also ideal for urban space, higher yields per square foot, and reduced water usage.

1.2 Comparison of Traditional and Semi-Automated Hydroponic Systems

Hydroponics is a soilless cultivation method in which a nutrient-rich water solution supplies essential minerals directly to plant roots. As the use of hydroponics has increased, different system configurations have been developed to meet various operating requirements and production capacities.

Table 1 *Comparison of traditional and semi-automated hydroponic systems*

Type of Comparison	Traditional hydroponic	Semi-Automated Hydroponic
Water / Nutrient Delivery	Fully manual to mix the nutrient and water the plants	Need to mix the nutrient and automated watering with pumps
User Skill Requirement	Requires detail knowledge and observation	Beginner friendly because of some automation
Maintenance	High – need a constant attention	Medium – less frequent but still need an attention
Lighting	Using Sun exposure	Using LED grow light
Cost	Low in cost but higher in labour cost	Slightly higher due to automation components

Table 1 shows two commonly used approaches which are traditional hydroponic systems and semi-automated hydroponic systems. Although both systems apply the same basic principle of growing plants without

soil, they differ mainly in how routine tasks such as water circulation, environmental monitoring, and system maintenance are managed. Traditional systems depend more heavily on manual observation and adjustment, whereas semi-automated systems use timers, sensors, and control devices to reduce manual intervention. Therefore, this section compares both systems in terms of automation level, labour requirements, monitoring capability, operating cost, and overall efficiency.

1.3 Hydroponic Mechanism

A semi-automated hydroponic system is designed to optimize plant growth by automating critical tasks such as nutrient delivery, lighting, and water circulation, while still relying on human intervention for monitoring and adjustments. This hybrid approach provides a balance between efficiency and affordability, making it suitable for small-scale growers, hobbyists, and educational settings. Previous studies have demonstrated that semi-automated hydroponic systems can use pH sensors, microcontrollers, pumps, and mixers to monitor and regulate nutrient-solution conditions. Saaid et al. developed an automated system for monitoring and controlling pH levels in hydroponic cultivation [9], while Yaqin et al. applied an Arduino-based pH control system using the SKU SEN0161 sensor [10]. Rico also developed a greenhouse hydroponic system that automatically monitored and controlled nutrient-solution pH using sensors, peristaltic pumps, and a mixer [11].

Unlike fully automated systems that depend on advanced sensors and software to manage every aspect of the environment, semi-automated setups typically use basic timers, pumps, and simple sensors to handle routine operations. Studies by Wibisono and Kristyawan showed that Arduino, water pumps, pH sensors, and ultrasonic sensors could be integrated into an automated Nutrient Film Technique system to improve nutrient circulation and distribution [12]. Naveena et al. similarly developed an automated hydroponic nutrient-control system using microcontrollers and sensors for smart agricultural applications [13].

A semi-automated hydroponic system is designed to enhance plant growth by automating key functions such as nutrient delivery, water circulation, and lighting, while still relying on human intervention for monitoring and certain manual tasks. This type of system typically uses simple and cost-effective components such as water pumps, timers, exhaust fans, and basic sensors to handle routine operations, making it an accessible solution for small-scale growers, hobbyists, and educational purposes. Unlike fully automated systems that rely on complex sensors and software for complete environmental control, semi-automated systems provide a balance between efficiency and user involvement. Users are still required to manually mix nutrients, check pH and electrical conductivity levels, and perform periodic maintenance.

Table 2 *Mechanism system in hydroponic*

Mechanics	Initial Cost	Operating Cost	Maintenance Cost	Longevity
Water Pump	Medium	Low	Medium to High	Medium
Manual Nutrient Mixing	Low	Very Low	Low	High
Exhaust Fan	Medium	Low	Medium to High	Medium

According to the hydroponic mechanism system in Table 2, the water pump and exhaust fan have medium initial costs, low operating costs, and medium longevity, although they may require moderate maintenance over time. Manual nutrient mixing, on the other hand, has low initial and operating costs, minimal maintenance requirements, and high longevity. Therefore, this hybrid approach makes semi-automated hydroponic systems practical and cost-effective, allowing growers to maintain a high level of control while benefiting from partial automation.

2. Methodology

The development of the semi-automated hydroponic system involved several key steps, beginning with the design using SolidWorks to plan and structure the component arrangement. Materials such as PVC, galvanized steel, polycarbonate sheets, and wood were selected for their durability and suitability under greenhouse conditions. Sensors for pH and temperature were integrated with an Arduino microcontroller to enable environmental monitoring and control. A scheduled water circulation system was implemented to automate irrigation, while LED grow lights provided sufficient lighting for spinach growth, particularly under indoor conditions.

The assembled system was tested for 21 days using spinach as the test crop. The vertical planting structure consisted of three layers with two planting pots per layer as in Fig. 1, providing six planting positions. During the testing period, the plants were grown inside the greenhouse under scheduled nutrient-solution circulation, LED grow lighting, pH monitoring, and temperature monitoring. An exhaust fan was used to regulate the greenhouse

temperature when required. Plant responses were evaluated on Days 1, 7, 14, and 21 based on plant height, number of leaves, and leaf colour to assess the system's functionality and growth performance.



Fig. 1 *Six planting position for spinach growth pot*

2.1 Material Selection

Semi-automated hydroponic system also focuses on the material used for the durability of the systems. To reach this goal, selection of the materials will play a big role in ensuring the semi-automated hydroponic system's success. The material used for the semi-automated hydroponic system used is PVC, galvanized steel, polycarbonate sheets and wood. Fig. 2 shows the four main materials selected for the semi-automated hydroponic system. PVC is used for the water flow and piping system because it is lightweight and resistant to water. Wood is used as a supporting structure because it is easy to cut and fabricate. Polycarbonate sheets are used as a protective cover because they are lightweight and durable. Galvanized steel is used for the main frame because it provides good strength and resistance to corrosion.



(a) **(b)** **(c)** **(d)**

Fig. 2 *Four types of materials used (a) PVC; (b) wood; (c) polycarbonate sheets; (d) galvanized steel*

2.2 Project Design

Based on the findings discussed in the previous section, a compact hydroponic system integrated with a greenhouse was proposed and developed. The system was designed to simplify routine hydroponic operations and reduce the amount of manual effort required by homeowners. An exhaust fan was installed into the greenhouse to improve air circulation and assist temperature regulation. The exhaust fan was initiated by the temperature sensor. Prior to fabrication, a complete three-dimensional model of the system was developed using SolidWorks to show the overall structure and arrangement of the components.

Fig. 3 shows the SolidWorks drawing of the semi-automated hydroponic system. The drawing shows the main frame, planting area, lifting mechanism, protective panels, and wheels. This design was created to show the arrangement and position of the components before the actual fabrication.

This hydroponic system is designed to operate with minimal human intervention. The pH, temperature, and humidity sensors transmit real-time data to the user's smartphone through an Internet of Things (IoT) platform. When the greenhouse temperature exceeds the predefined limit, the exhaust fan is activated automatically to remove excess heat and improve air circulation. The fan switched off back once the temperature returns to the suitable range. The system is classified as semi-automated because certain tasks, particularly the replacement and preparation of the nutrient solution, still require manual intervention.

Multidisciplinary Applied Research and Innovation Vol. 7 No. 3 (2026) p. 263-269

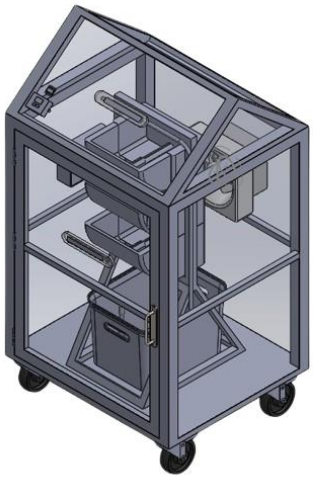

Fig. 3 *SolidWorks drawing of the semi-automated hydroponic system*

3. Results and Discussion

Fig. 4 shows the completed semi-automated hydroponic system housed within a compact greenhouse. The prototype consists of a multi-level planting setup, LED grow lights, a nutrient reservoir, environmental sensors, and the required control components. The greenhouse enclosure helps provide a more stable growing environment, while the semi-automated features reduce the need for frequent manual monitoring.

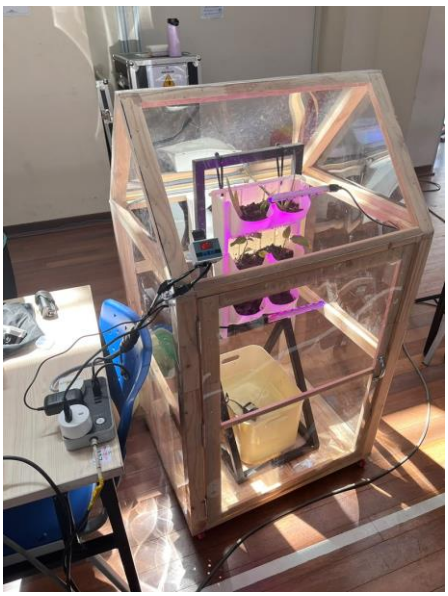

Fig. 4 *Completed semi automated hydroponic system*

Table 3 *Plant growth testing between traditional with semi-automated hydroponic system*

System	Average leaf length (cm)	Average height (cm)	Leaf colour	Growth rate (%)
Traditional system	5.2	7	Light green/ yellowish	60
Semi-automated system	7.8	10	Bright green to dark green	90

Table 3 shows the test that have been done on the plant's growth between traditional hydroponic with semi-automated hydroponic system. Based on the data obtained, it is evident that plants grown under the Semi-Automated system perform better in terms of key growth parameters compared to those grown under the

Traditional system. The average leaf length in the Semi-Automated system was 7.8 cm, while the traditional system only produced leaves with an average length of 5.2 cm. This shows that the Semi Automated system helps plants develop larger leaves, which is important for photosynthesis.

The average plant height also increased in the Semi Automated system, reaching 10cm, compared to 7cm in the traditional system. Taller plants usually indicate the growing conditions, such as nutrients and light, which can be achieved better with a system that controls these factors automatically.

In terms of leaf color, plants in the Traditional system appeared to be lighter green or yellowish leaves compared to bright green to dark green in the Semi Automated system. The leaves in the traditional system showed a sign of nutrient deficiency meanwhile the dark green indicated healthier growth and better nutrient absorption. The growth rate in the Semi Automated system was also higher at 90%, compared to 60% in the traditional system. This shows that plants under the Semi Automated system grew faster and more efficiently, mainly because the system can provide consistent watering, nutrients, and suitable environmental conditions.

Overall, these results show that the Semi Automated system helps plants grow taller, develop larger and healthier leaves, and achieve a higher growth rate. This proves that using technology in farming can improve plant growth and reduce problems caused by manual labor.

4. Conclusion

In conclusion, the Semi-Automated Hydroponic System produced better plant growth than the Traditional system. Plants grown using the Semi Automated system achieved an average leaf length of 7.8 cm, an average height of 10 cm, and a growth rate of 90%. In comparison, plants in the Traditional system recorded 5.2 cm, 7 cm, and 60%, respectively. The plants grown in the Semi Automated system also had brighter green to dark green leaves, which suggests healthier growth and better nutrient uptake.

The use of scheduled water circulation, LED grow lights, environmental sensors, and an automatically controlled exhaust fan helped maintain more consistent growing conditions. These features also reduced the need for frequent manual monitoring. Overall, the system provides a practical and efficient option for small-scale hydroponic farming, especially for beginners and homeowners with limited farming experience.

Acknowledgement

The authors would like to thank the Centre for Diploma Studies, Universiti Tun Hussein Onn Malaysia for its financial support and facilitation in this project.

Conflict of Interest

Authors declare that there is no conflict of interests regarding the publication of the paper.

Author Contribution

The authors confirm contribution to the paper as follows: ***study concept and design****: Emylia Syafiqa Jasmi;* ***data collection****: Nursyamila Muhammad and Nurul Fateen Nadiana****; analysis of results****: Emylia Syafiqa Muhammad, Nursyamila Muhammad, Nurul Fateen Nadiana;* ***draft manuscript preparation****: Khairulnizam Ngadimon. All authors reviewed the results and approved the final version of the manuscript*.

References

[1] The Editors of Encyclopaedia Britannica, "*Hydroponics: Definition, technology, uses, benefits, disadvantages, and facts*," Encyclopaedia Britannica, n.d. [Online]. Available: https://www.britannica.com/science/hydroponics. [Accessed: Aug. 2, 2026].

[2] S. Nxawe, P. A. Ndakidemi, and C. P. Laubscher, "*Possible effects of regulating hydroponic water temperature on plant growth, accumulation of nutrients and other metabolites*," African Journal of Biotechnology, vol. 9, no. 54, pp. 9128–9134, Dec. 2010, doi: 10.5897/AJB2010.000-3336.

[3] University of Minnesota Extension, "*Growing systems*." [Online]. Available: https://extension.umn.edu/how/small-scale-hydroponics. [Accessed: Aug. 2, 2026].

[4] A. A. Abdullah, C. L. Lee, S. K. Wong, A. F. A. Osman, Z. L. Sum, and K. Y. Chan, "*The effect of LED grow light photoperiods on indoor hydroponic lettuce farming*," Journal of Advanced Research in Applied Sciences and Engineering Technology, vol. 32, no. 1, pp. 368–377, Sep. 2023, doi: 10.37934/araset.32.1.368377.

[5] B. Dunn and A. Shrestha, "*Oklahoma Cooperative Extension Service*." [Online]. Available: http://osufacts.okstate.edu. [Accessed: Aug. 2, 2026].

[6] R. G. Snyder, "*Greenhouse and hydroponics systems*." [Online]. Available: http://www.msucares.com/crops/comhort/greenhouse.html. [Accessed: Aug. 2, 2026].

[7] C. K. Panigrahi, A. Rout, and N. Ranasingh, "*Advances in hydroponic systems for efficient water use offer a sustainable approach to modern agriculture*," in Modern Concepts in Agriculture, vol. 4. Golden Leaf Publisher, 2024, pp. 13–32. [Online]. Available: https://www.researchgate.net/publication/380855167.
[8] P. Barui, P. Ghosh, and U. Debangshi, "*Vertical farming—An overview*," Plant Archives, vol. 22, no. 2, pp. 223–228, Oct. 2022, doi: 10.51470/plantarchives.2022.v22.no2.038.
[9] M. F. Saaid, A. I. M. Yassin, and N. M. Tahir, "*Automated monitoring and controlling pH levels for hydroponics cultivation technique*," Indonesian Journal of Electrical Engineering and Computer Science, vol. 18, no. 3, pp. 1236–1243, 2020, doi: 10.11591/ijeecs.v18.i3.pp1236-1243.
[10] N. Yaqin, A. F. Zuhri, and T. Hariono, "*Automatic control of hydroponic plant pH levels using sensor SKU SEN 0161*," NEWTON: Networking and Information Technology, vol. 1, no. 3, pp. 125–131, Feb. 2022, doi: 10.32764/newton.v1i3.2094.
[11] A. L. J. Rico, "*Automated pH monitoring and controlling system for hydroponics under greenhouse condition*," ARPN Journal of Engineering and Applied Sciences, vol. 15, no. 2, pp. 523–528, 2020, doi: 10.36478/JEASCI.2020.523.528.
[12] V. Wibisono and Y. Kristyawan, "*An efficient technique for automation of the NFT (Nutrient Film Technique) hydroponic system using Arduino*," International Journal of Artificial Intelligence & Robotics, vol. 3, no. 1, pp. 44–49, May 2021, doi: 10.25139/ijair.v3i1.3209.
[13] A. Naveena, S. N. Saheb, R. Mamidi, and G. L. N. Murthy, "*Automated hydroponic nutrient control system for smart agriculture*," Indonesian Journal of Electrical Engineering and Computer Science, vol. 33, no. 2, pp. 839–846, Feb. 2024, doi: 10.11591/ijeecs.v33.i2.pp839-846.