MARI

MULTIDISCIPLINARY APPLIED RESEARCH AND INNOVATION
e-ISSN: 2773-4773

Vol. 7 No. 3 (2026) p. 294-299
https://publisher.uthm.edu.my/periodicals/index.php/mari

The Pawfect Feeder

Ghazali Kadis[1,2]*, Putra Nor Hakimi Nor Azlan[1], Muhammad Amin Firdaus Abdullah[1], Amirul Akmal Amran[1], Muhammad Azri Othman[1], Muhammad Qusyairi Abdul Rahman[1], Nurmina Abdullah[1]

[1] *Department of Mechanical Engineering, Centre for Diploma Studies*
Universiti Tun Hussein Onn Malaysia, Pagoh Higher Education Hub, 84600 Pagoh, Johor, MALAYSIA
[2] *Product Research and Development (ProRed), Centre for Diploma Studies*
Universiti Tun Hussein Onn Malaysia, Pagoh Higher Education Hub, 84600 Pagoh, Johor, MALAYSIA

*Corresponding Author: ghazali@uthm.com.my
DOI: https://doi.org/10.30880/mari.2026.07.03.038

Article Info

Received: 01 September 2026
Accepted: 15 October 2026
Available online: 01 December 2026

Keywords

Pawfect Feeder, ESP8266, servo motor, automated feeding, pet care, Wi-Fi controlled system

Abstract

The Pawfect Feeder is an automated pet-feeding prototype designed to reduce manual feeding and provide scheduled dispensing of dry food. The control system combines an ESP8266 microcontroller for Wi-Fi-enabled operation with a servo motor that actuates a food-discharge valve. The mechanical structure consists of a hopper, funnel, valve, bowl, lid, and supporting stands. This paper presents the design, fabrication, and preliminary performance evaluation of the prototype. Three tests were conducted to evaluate food-storage capacity, valve opening time, and servo rotation angle. The feeder successfully supported up to 4 kg of dry food under the tested conditions. Valve-opening tests released 63, 126, 190, and 250 g of food at opening times of 1, 2, 3, and 4 s, respectively. Smooth food flow was observed at a servo angle of 60°, while 20° did not release food and 80°–90° released food too quickly. The results show that the prototype can automate dry-food dispensing using simple hardware. Further testing with repeated trials, different kibble sizes, and a complete feeding schedule is recommended to establish repeatability and long-term performance.

1. Introduction

The Pawfect Feeder is an automated pet-feeding system developed to simplify feeding for household pets, particularly cats and dogs. Manual feeding can become inconsistent when owners are busy, travelling, or away from home, which may result in irregular feeding intervals. The development of low-cost microcontroller and Internet of Things (IoT) technologies provides an opportunity to automate routine household tasks. In this project, an ESP8266 microcontroller is used to provide wireless connectivity, while a servo motor controls the food-discharge mechanism [1].

The project focuses on a simple feeder design that combines electronic control with a mechanical dispensing structure. The electronic system consists mainly of the ESP8266 and servo motor, while the mechanical structure includes the hopper, funnel, valve, bowl, lid, and supporting stands. This arrangement is intended to reduce the number of components while maintaining controllable food dispensing. The use of pet-related smart technology has also received increasing attention, reflecting the growth of the pet-technology market [2].

The objective of this project is to design and fabricate a functional Pawfect Feeder and evaluate its preliminary dispensing performance. Three tests were conducted to determine the maximum tested food-storage load, the

This is an open access article under the CC BY-NC-SA 4.0 license.

Multidisciplinary Applied Research and Innovation Vol. 7 No. 3 (2026) p. 294-299

relationship between valve opening time and food mass, and the servo rotation angle required for smooth food flow. The findings provide a basic operating range for the prototype and identify areas for further improvement

2. Literature Review

Automated pet feeders differ in their feeding mechanism, level of automation, and control features. The literature and available commercial products show a progression from simple gravity-based feeders to semi-automatic and smart automatic systems. For this project, the main design considerations are portion control, ease of operation, mechanical simplicity, and the ability to control dispensing electronically.

2.1 Available Pet Feeder in Market

Commercial pet feeders can be grouped into three broad types: gravity-based feeders, semi-automatic feeders, and smart automatic feeders. Each type offers different levels of simplicity, portion control, and automation. A comparison of these options is useful for identifying the design requirements of the Pawfect Feeder.

The gravity-based feeder shown in Fig. 1(a) uses gravity to replenish the food bowl as the food level decreases [3]. Its main advantages are simple construction, low cost, and easy cleaning. However, it provides limited control over feeding portions and may spill or tip if it is not placed on a stable surface. The semi-automatic feeder in Fig. 1(b) provides more controlled dispensing and can reduce manual feeding effort [4]. However, it still has limitations related to manual refilling and the reliability of its dispensing or sealing mechanism. The smart automatic feeder in Fig. 1(c) provides functions such as scheduled feeding, sensors, and remote monitoring [5]. These features increase functionality but also introduce additional components and programming requirements. Based on these comparisons, the Pawfect Feeder adopts the smart-feeder concept while using a simplified control system based on an ESP8266 and servo motor.

The selected approach therefore emphasizes a balance between automation and simplicity. The ESP8266 provides wireless control capability, while the servo motor provides controlled movement of the dispensing valve. The mechanical design is kept relatively simple so that the prototype can be fabricated, maintained, and adjusted without a complex sensor system.

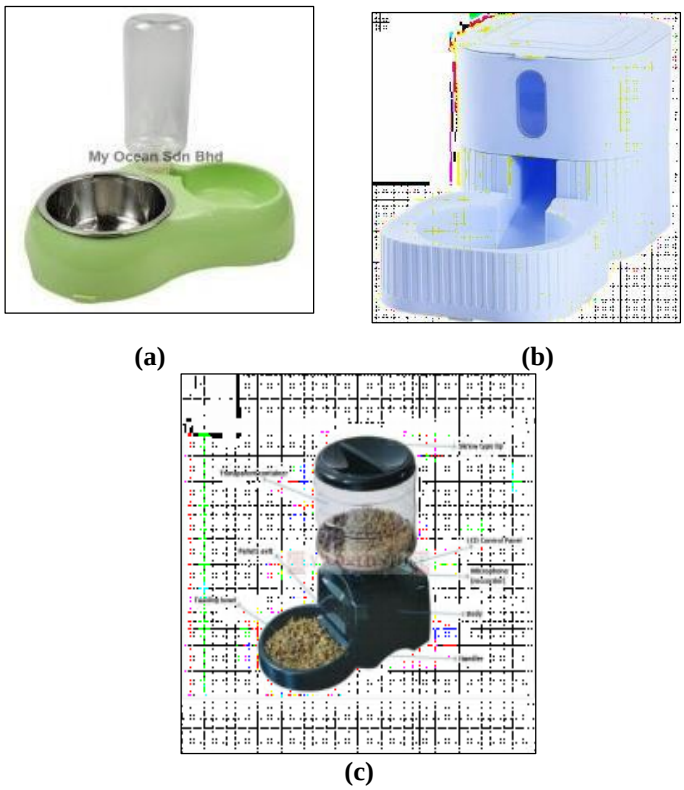

Fig. 1 *Commercial pet feeders: (a) Pet Feeder 826 [3]; (b) 1.8 L automatic pet feeder [4]; (c) 5.5 L automatic pet feeder*

2.2 Types of Motor

Servo and DC motors are two possible actuators for a pet-feeding mechanism. A servo motor is suitable when the actuator must move to a defined angular position. It can therefore be used to open and close a valve at a controlled

angle [6]. In this project, the ESP8266 sends a control signal to the servo motor to operate the dispensing valve. The main advantages of the servo motor are positional control, compact size, and suitability for intermittent movement. A DC motor, in contrast, is commonly used where continuous rotation and torque are required, but additional control hardware may be needed when precise angular positioning is required [7]. Therefore, the servo motor was selected because the feeder requires controlled valve movement rather than continuous rotation.



(a)

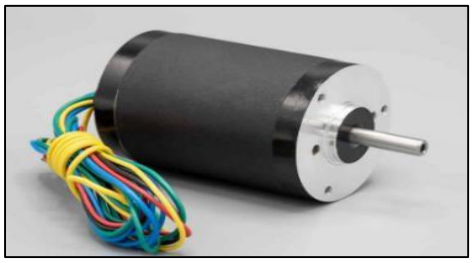

(b)

Fig. 2 *Motor options: (a) servo motor [6]; (b) DC motor [7]*

2.3 Types of Microcontroller Systems

Several microcontroller platforms were considered for the feeder, including the Arduino Uno, ESP8266, Arduino Leonardo, STM32, and Raspberry Pi Pico, as shown in Fig. 3. ESP8266 was selected because it provides integrated Wi-Fi connectivity and supports the GPIO and PWM functions required to control the servo motor [1]. It can also be programmed using the Arduino development environment, which simplifies prototype development. The Arduino Uno and Arduino Leonardo are widely used development boards, but the required wireless function would require additional hardware. The STM32 family provides higher-performance microcontrollers for a wider range of applications [10], while the Raspberry Pi Pico is available in versions with and without wireless connectivity. For the present project, the ESP8266 provides the required wireless and control functions with a relatively simple hardware arrangement. The final selection was therefore based on the functional requirements of the feeder rather than on processing performance alone [8], [9], [10].

Multidisciplinary Applied Research and Innovation Vol. 7 No. 3 (2026) p. 294-299

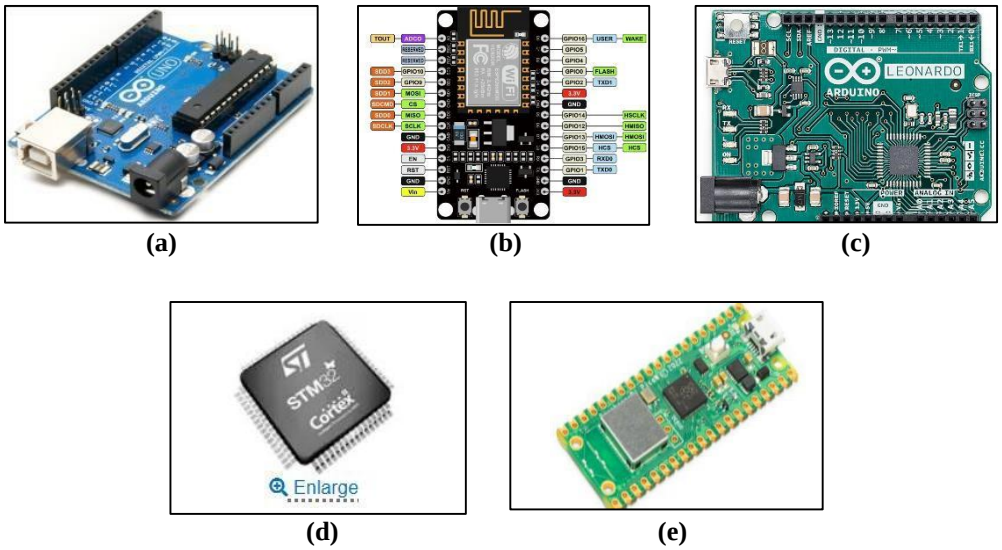

Fig. 3 *Microcontroller options: (a) Arduino Uno; (b) ESP8266 [1]; (c) Arduino Leonardo; (d) STM32 [10] (e) Raspberry Pi Pico*

3. Methodology

The ESP8266 microcontroller shown in Fig. 4(a) acts as the central control unit of the Pawfect Feeder. It receives the programmed control commands and sends PWM (Pulse Width Modulation) signals to the servo motor. The ESP8266 operates at 3.3 V DC and provides built-in Wi-Fi connectivity, which supports wireless control. The servo motor shown in Fig. 4(b) converts the electrical control signal into rotational motion and operates the food-discharge valve. The motor has a stated rotational range of 0° to 180° and is connected mechanically to the valve. These two components form the main electronic control system of the feeder.

The clip-on lid shown in Fig. 4(c) seals the hopper and helps protect the stored food from dust, moisture, and pests. The hopper in Fig. 4(d) is the main food-storage component. It is made from acrylic and has a tapered form to guide dry food toward the funnel. Its transparency also allows the food level to be observed without opening the feeder.

The aluminium bowl shown in Fig. 4(e) collects the dispensed food for the pet. The bowl is secured in the base to reduce movement during operation. The food funnel in Fig. 4(f) guides food from the hopper to the bowl. Its opening increases from 10 cm at the top to 18.5 cm at the bottom to support food flow and reduce the likelihood of blockage. The lid shown in Fig. 4(g) covers the upper section of the hopper and provides additional protection for the stored food.

The supporting stands shown in Figure 4(h) provide structural support and elevate the feeder above the bowl. Two PVC pipes with a diameter of 10 cm and a height of 10 cm were used as supports. The selected dimensions provide a stable base and sufficient clearance for food to flow from the funnel into the bowl. Together, the electronic and mechanical components form the fabricated Pawfect Feeder prototype.

The lid Fig. 4(g) is a vital component that covers the top of the hopper to protect the stored food. Made from transparent acrylic, the lid is both sturdy and lightweight. It helps keep the food clean by preventing dust, insects, or moisture from entering the container. The transparency of the material allows the user to see the food level easily without removing the lid. With a dimension of 42 cm x 31 cm, it fits perfectly over the funnel and bowl area, avoiding spillage and contributing to a neat and modern appearance. The lid is also easy to detach for refilling or cleaning purposes. The stands Fig. 4(h) are structural supports that hold up the Pawfect Feeder and keep it stable. In this project, we used two PVC pipes, each with a diameter of 10 cm and a height of 10 cm. These dimensions provide a sturdy base that prevents the system from tipping over. PVC was chosen for its durability, lightweight properties, and resistance to corrosion. The stand elevates the feeder to an appropriate height, making it easier for pets to reach the bowl comfortably. Additionally, the wide diameter adds extra stability, and the height provides enough clearance underneath the funnel for food to flow freely. This structure helps ensure the Pawfect Feeder operates safely and effectively.

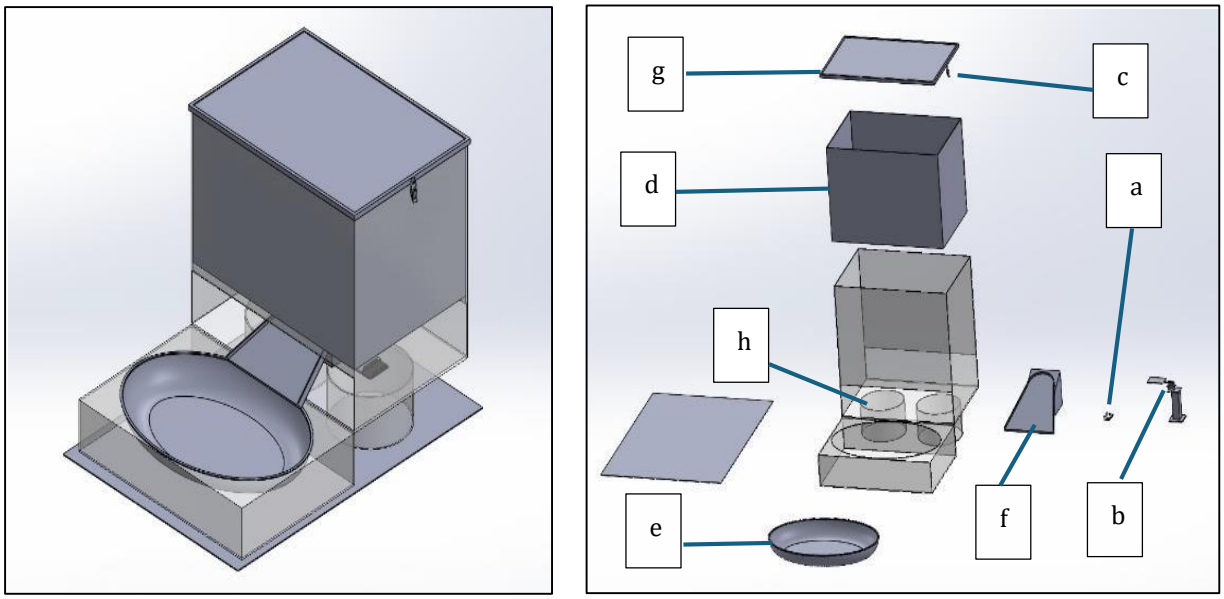

Fig. 4 *Exploded drawing of the Pawfect Feeder: (a) ESP8266; (b) servo motor; (c) clip-on lid; (d) hopper; (e) aluminium bowl; (f) food funne; (g) lid; (h) stands*

3.1 Experimental Setup

After the Pawfect Feeder prototype was fabricated, three preliminary tests were conducted to evaluate its dispensing performance. The tests examined (i) the dry-food storage capacity, (ii) the relationship between valve opening time and food mass, and (iii) the servo rotation angle required for smooth food flow.

For Test 1, dry food was added gradually to the hopper at 1, 2, 3, and 4 kg. The structure, hopper, funnel, valve, and food flow were observed during loading. Both small-sized and large-sized kibble were considered to observe whether food could pass through the dispensing path.

For Test 2, the valve opening time was varied from 1 to 4 s. A digital scale was placed below the valve to measure the mass of food released at each opening time. The ESP8266 controlled the servo motor, which opened and closed the valve. The measured food mass was recorded for each opening time.

For Test 3, the servo angle was varied at 20°, 40°, 60°, 80°, and 90°. The food flow was observed at each angle. The purpose was to identify an operating angle that allowed food to pass through the valve without remaining blocked or being released excessively quickly. The available manuscript data report the observed response at each tested angle; repeatability data were not reported, so the result is treated as a preliminary operating-point observation rather than a statistical efficiency measurement.

The three tests were performed under the prototype conditions described above. The measured and observed responses are presented and discussed in the following section.

4. Result and Discussion

The results were analysed according to the three performance tests. The first test established the maximum tested storage load, the second established the relationship between valve opening time and dispensed food mass, and the third identified the observed servo angle for smooth food flow.

For Test 2, the valve opening time affected the amount of food dispensed. The measured values were 63 g at 1 s, 126 g at 2 s, 190 g at 3 s, and 250 g at 4 s. The results show a clear increase in dispensed mass as the valve remained open for a longer period. Under the tested conditions, a 1-s opening released approximately 63 g of dry food. Because the manuscript reports one measured value for each opening time, additional repeated trials are required before the dispensing relationship can be treated as a repeatable calibration curve.

For Test 3, the observed food-flow response changed with servo angle. At 20°, food did not drop. At 40°, some food started to drop but the flow was not smooth. At 60°, food was observed to drop smoothly and evenly. At 80° and 90°, the food dropped too quickly, which could increase the risk of dispensing more food than intended. Thus, 60° was identified as the operating angle observed to provide smooth flow in this preliminary test. Since the number of repeated trials was not reported, this result should be validated through repeated measurements using different kibble sizes and quantities.

5. Conclusion and Recommendation

The Pawfect Feeder was fabricated and evaluated using three preliminary performance tests. The feeder supported a tested dry-food load of up to 4 kg without structural failure or interruption of food flow. The valve-opening test showed that 1, 2, 3, and 4 s produced 63, 126, 190, and 250 g of food, respectively, under the tested conditions. The servo-angle test showed that 20° did not release food, 40° produced irregular flow, 60° produced smooth flow, and 80°–90° released food too quickly. These results provide an initial operating range for the prototype. However, the reported tests do not establish repeatability or long-term reliability. Future work should include repeated trials, a wider range of kibble sizes and shapes, quantitative dispensing-error analysis, and testing of the complete scheduled-feeding function. The valve and funnel can also be improved to reduce blockage and provide more consistent dispensing.

Acknowledgement

The authors would like to thank the Centre for Diploma Studies, Universiti Tun Hussein Onn Malaysia for its financial support and facilitation in this project.

Conflict of Interest

Authors declare that there is no conflict of interests regarding the publication of the paper.

Author Contribution

The authors confirm contribution to the paper as follows: ***study conception and design:*** *Ghazali Kadis, Putra Nor Hakimi Nor Azlan, Muhammad Amin Firdaus Abdullah, Amirul Akmal Amran;* ***data collection:*** *Putra Nor Hakimi Nor Azlan, Muhammad Amin Firdaus Abdullah, Amirul Akmal Amran;* ***analysis and interpretation of results:*** *Ghazali Kadis, Putra Nor Hakimi Nor Azlan, Muhammad Amin Firdaus Abdullah, Amirul Akmal Amran;* ***draft manuscript preparation:*** *Ghazali Kadis, Putra Nor Hakimi Nor Azlan, Muhammad Amin Firdaus Abdullah, Amirul Akmal Amran, Muhammad Azri Othman, Muhammad Qusyairi Abdul Rahman, Nurmina Abdullah. All authors reviewed the results and approved the final version of the manuscript.*

References

[1] Espressif Systems, "*ESP8266EX Datasheet*," 2020. [Online]. Available: https://www.espressif.com/sites/default/files/documentation/0a-esp8266ex_datasheet_en.pdf
[2] Statista Research Department, "*Pet Tech Market Value Worldwide 2023–2028*," Statista, 2023. [Online]. Available: https://www.statista.com/statistics/1295119/pet-tech-market-size-worldwide/
[3] My Ocean Sdn. Bhd., "*Pet Feeder 826*." [Online]. Available: https://www.myocean.com/pet-feeder-826
[4] Lazada.com, "*Automatic Pet Feeder Water Food Feeder 1.8L*." [Online]. Available: https://www.lazada.com.my/products/automatic-pet-feeder-water-food-1.8L
[5] Shopee Mobile Malaysia Sdn. Bhd., "*Automatic Pet Feeder (Upgrade Version) Dog Cat 5.5L*." [Online]. Available: https://www.shopee.com.my/product/automatic-pet-feeder-upgrade
[6] ElectronicWings, "*Servo Motor Basics, Working Principle & Interfacing with Arduino*." [Online]. Available: https://www.electronicwings.com/nodemcu/servo-motor-interface\
7] Testbook Edu Solutions Pvt. Ltd., "*DC Motor: Learn Definition, Diagram, Construction, Working, Types, Characteristics and Applications*." [Online]. Available: https://testbook.com/electrical-machines/dc-motor
[8] D. Singh and S. Sharma, "*Design and Implementation of IoT Based Smart Home Automation Using ESP8266*," International Journal of Engineering Research & Technology (IJERT), vol. 10, no. 5, pp. 245–250, 2021.
[9] Z. Botirovich et al., "*Design of Smart Pet Feeder Based on IoT Using ESP8266*," Journal of Mechatronics and Automation, vol. 4, no. 2, pp. 30–36, 2022.
[10] STMicroelectronics, "*STM32 32-bit Arm Cortex-M Microcontrollers*." [Online]. Available: https://www.st.com/en/microcontrollers-microprocessors/stm32-32-bit-arm-cortex-mcus.html